Cambridge Assessment International Education

Cambridge International AS & A Level

CANDIDATE NAME									
CENTRE NUMBER						CANDIDATE NUMBER				

PHYSICS **9702/31**

Paper 3 Advanced Practical Skills 1 **October/November 2022**

2 hours

You must answer on the question paper.

You will need: The materials and apparatus listed in the confidential instructions

INSTRUCTIONS

- Answer **all** questions.
- Use a black or dark blue pen. You may use an HB pencil for any diagrams or graphs.
- Write your name, centre number and candidate number in the boxes at the top of the page.
- Write your answer to each question in the space provided.
- Do **not** use an erasable pen or correction fluid.
- Do **not** write on any bar codes.
- You will be allowed to work with the apparatus for a maximum of 1 hour for each question.
- You should record all your observations in the spaces provided in the question paper as soon as these observations are made.
- You may use a calculator.
- You should show all your working and use appropriate units.

INFORMATION

- The total mark for this paper is 40.
- The number of marks for each question or part question is shown in brackets [ ].

For Examiner's Use	
1	
2	
Total	

This document has **12** pages.

© UCLES 2022

You may not need to use all of the materials provided.

1 In this experiment, you will investigate oscillations of card shapes.

(a) You have been provided with a circular card of radius 10.0 cm.

- Draw a circle on the card of radius 9.0 cm, as shown in Fig. 1.1.

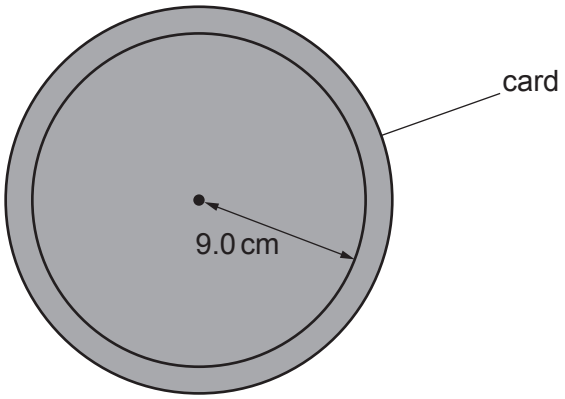

Fig. 1.1 (not to scale)

- Fold the card in half. Cut carefully along the line, as shown in Fig. 1.2, and keep both parts of the card.

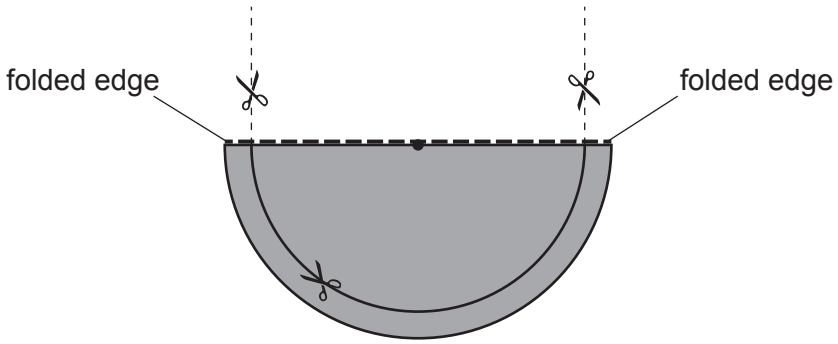

Fig. 1.2 (not to scale)

- The distance between the centre of one side of the card shape and the centre of the other side is *d*, as shown in Fig. 1.3.

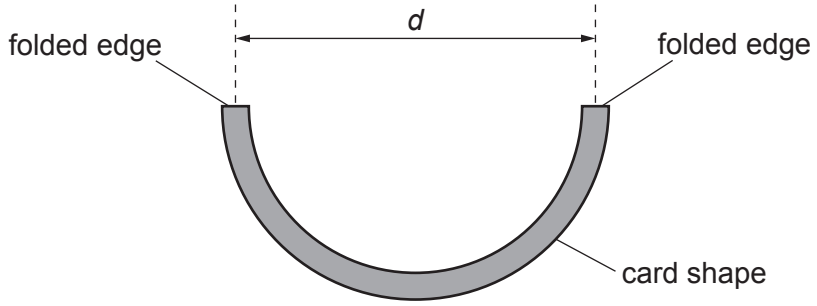

Fig. 1.3

Measure and record *d*.

d = ... [1]

(b) • Stand the card shape on the bench.

- Adjust the loops of card until the distance between the points where the loops touch the bench is approximately 3 cm, as shown in Fig. 1.4.

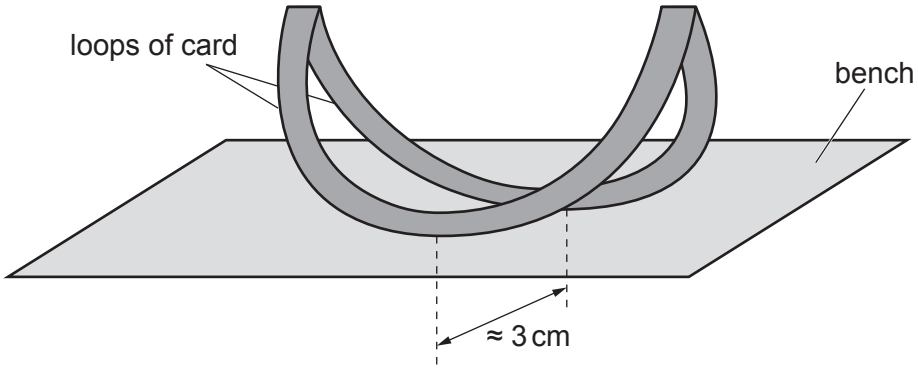

Fig. 1.4

- Gently press down one side of the card shape through a short distance. Release the card shape so that it oscillates.

- Determine the period *T* of these oscillations.

T = ... [2]

(c) Use the remaining card to cut out shapes of smaller radius, each with the same width of 1.0 cm.
For each card shape, measure d and repeat **(b)**. Repeat until you have five sets of values of d and T.

Record your results in a table. Include values of T^2 in your table.

[8]

(d) **(i)** Plot a graph of T^2 on the y-axis against d on the x-axis. [3]

(ii) Draw the straight line of best fit. [1]

(iii) Determine the gradient and y-intercept of this line.

gradient = ...

y-intercept = ...
[2]

© UCLES 2022

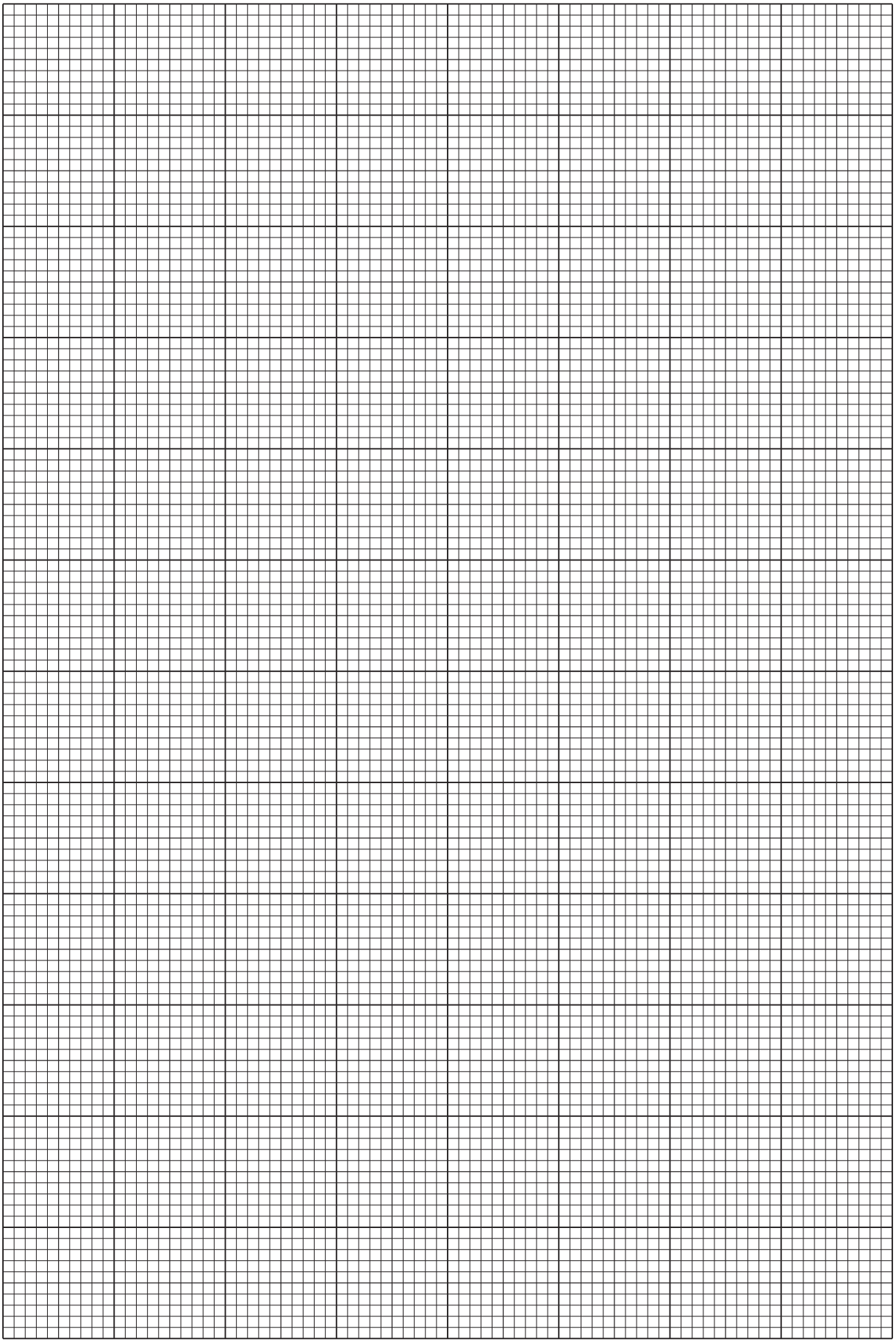

(e) It is suggested that the quantities T and d are related by the equation

$$T^2 = Ad + B$$

where A and B are constants.

Using your answers in **(d)(iii)**, determine the values of A and B.
Give appropriate units.

A = ...

B = ...
[2]

(f) Theory suggests that

$$A = \frac{2\pi^2}{g}$$

where g is the acceleration of free fall.

Use your value of A in **(e)** to determine a value for g.
Give an appropriate unit.

g = ... [1]

[Total: 20]

© UCLES 2022

You may not need to use all of the materials provided.

2 In this experiment, you will investigate the collision of two pendulums.

(a) (i) • Mould the two pieces of modelling clay onto the ends of the **shorter** strings to make two pendulums, as shown in Fig. 2.1.

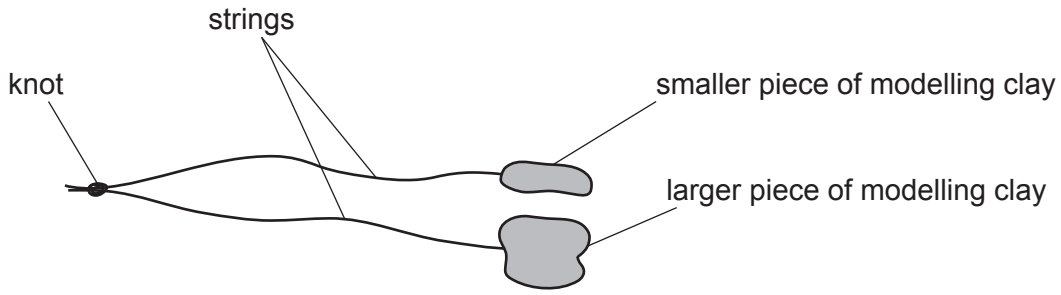

Fig. 2.1

• Set up the apparatus as shown in Fig. 2.2.

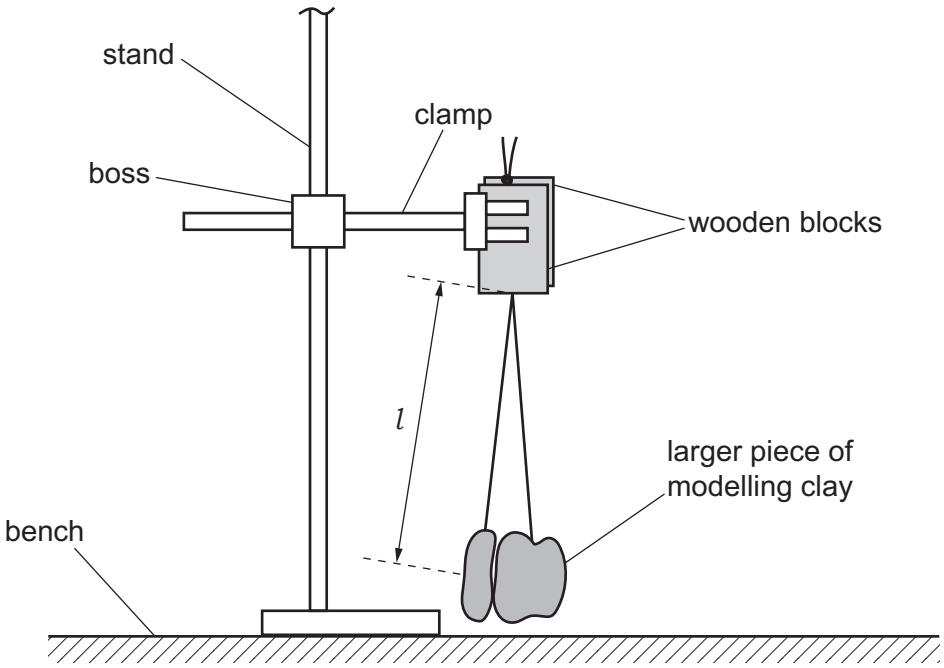

Fig. 2.2

• Adjust the modelling clay until the lengths of the pendulums are the same.

• The distance between the bottom of the wooden blocks and the centre of the smaller piece of modelling clay is l, as shown in Fig. 2.2.

Measure and record l.

l = ... [1]

(ii) • Hold the larger pendulum a short distance away from the smaller pendulum, as shown in Fig. 2.3.

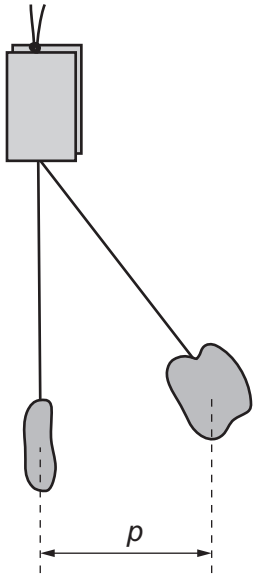

Fig. 2.3

- The horizontal distance between the centres of the pendulums is p.
- Hold the larger pendulum so that p is approximately 12 cm.
- Measure and record p.

p = ... [1]

(iii) Calculate R where

$$R = \sqrt{\left(1 - \frac{p^2}{l^2}\right)}.$$

R = ... [1]

(b) Justify the number of significant figures that you have given for your value of R.

.....

.....

..... [1]

(c) (i)

- Hold the larger pendulum so the horizontal distance between the centres of the pendulums is p.
- Release the larger pendulum so that the pendulums collide.
- After colliding, the maximum angle between the vertical and the string of the **smaller** pendulum is θ, as shown in Fig. 2.4.

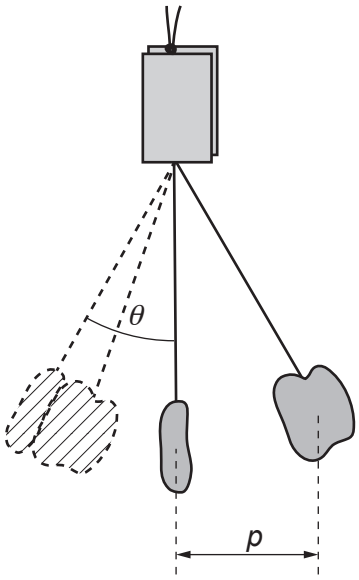

Fig. 2.4

Measure and record θ.

θ = ... ° [2]

(ii) Estimate the percentage uncertainty in your value of θ. Show your working.

percentage uncertainty = ...% [1]

(d) • Remove the modelling clay from the strings.

• Repeat **(a)** and **(c)(i)** using the **longer** strings.

l = ...

p = ...

R = ...

θ = ... °

[3]

(e) It is suggested that the relationship between θ and R is

$$k(1 - \cos\theta) = 1 - R$$

where k is a constant.

Using your data, calculate two values of k.

first value of k = ...

second value of k = ...
[1]

(f) It is suggested that the percentage uncertainty in the values of k is 10%.

Using this uncertainty, explain whether your results support the relationship in **(e)**.

.....

.....

.....

..... [1]

(g) (i) Describe **four** sources of uncertainty or limitations of the procedure for this experiment.

For any uncertainties in measurement that you describe, you should state the quantity being measured and a reason for the uncertainty.

1 .....

.....

2 .....

.....

3 .....

.....

4 .....

.....

[4]

(ii) Describe **four** improvements that could be made to this experiment. You may suggest the use of other apparatus or different procedures.

1 .....

.....

2 .....

.....

3 .....

.....

4 .....

.....

[4]

[Total: 20]

Permission to reproduce items where third-party owned material protected by copyright is included has been sought and cleared where possible. Every reasonable effort has been made by the publisher (UCLES) to trace copyright holders, but if any items requiring clearance have unwittingly been included, the publisher will be pleased to make amends at the earliest possible opportunity.

To avoid the issue of disclosure of answer-related information to candidates, all copyright acknowledgements are reproduced online in the Cambridge Assessment International Education Copyright Acknowledgements Booklet. This is produced for each series of examinations and is freely available to download at www.cambridgeinternational.org after the live examination series.

Cambridge Assessment International Education is part of Cambridge Assessment. Cambridge Assessment is the brand name of the University of Cambridge Local Examinations Syndicate (UCLES), which is a department of the University of Cambridge.